C	09500	B

REV	REVISION DESCRIPTION	ECN	INIT	DATE	APPROVAL
A	RELEASE TO PROD	0-246	PMB	3/7/96	D RUTAN
B	ADDED SPEC SHEET INFO	0-1300	CJR	10/2/03	C.STEWART
C	ADDED NOTES 5 AND 6	100-7150	GWB	6/5/06	J. RYAN

PROPRIETARY TO WELCH ALLYN
INTERNAL USE ONLY, DO NOT COPY OR DISTRIBUTE

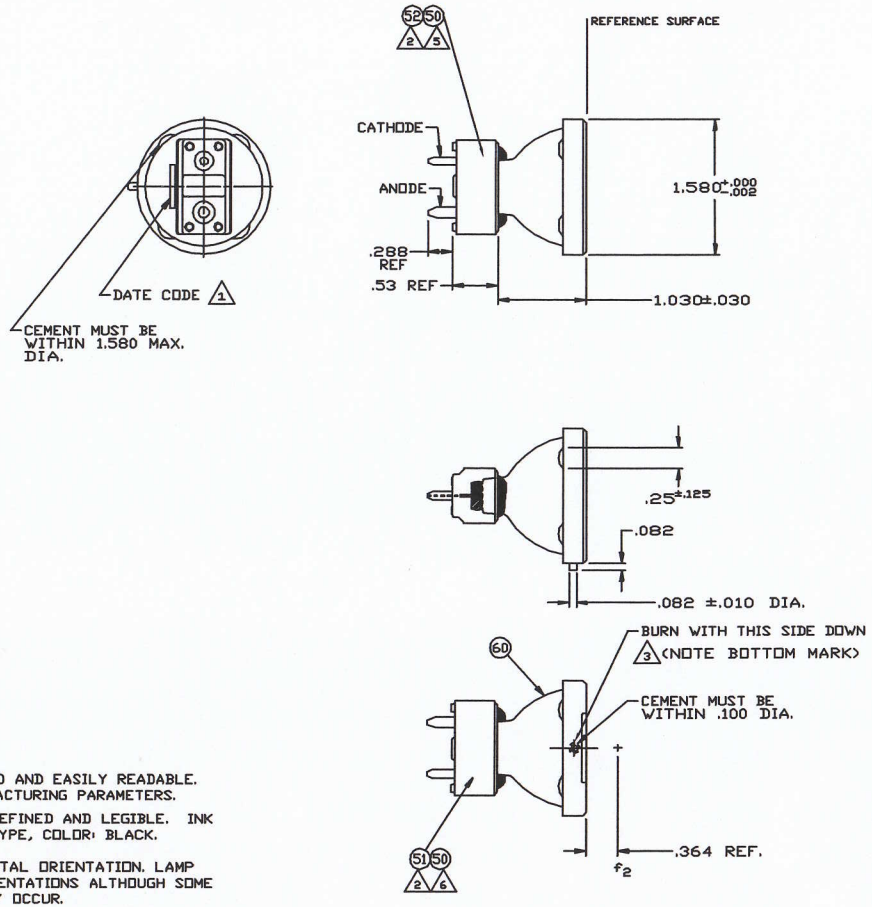

NOMINAL SPECIFICATIONS INITIAL MEASUREMENTS USING B24N001 BALLAST ANODE TIP FORCED COOLED TO 500 ±50 °F	
WATTAGE	24 ±1
LUX THRU 2mm APERTURE	1.08 E 8 AVG
X CHROM	.32
Y CHROM	.33
MAINTENANCE AFTER 100 HRS.	85% AVG.
MEDIAN LIFE NOT MORE THAN 50% BELOW	300 HRS.
SPOT SIZE TO 50% OF CENTER LUX	2mm

NOTES:

1. DATE CODE PERMANENTLY MARKED AND EASILY READABLE. TRACEABLE BACK TO ALL MANUFACTURING PARAMETERS.
2. ALL CHARACTERS TO BE WELL DEFINED AND LEGIBLE. INK TO BE PERMANENT, FAST-DRY TYPE, COLOR: BLACK.
3. LAMP IS SPECIFIED IN HORIZONTAL ORIENTATION. LAMP MAY BE OPERATED IN OTHER ORIENTATIONS ALTHOUGH SOME VARIATION IN PERFORMANCE MAY OCCUR.
4. NOTIFY THE MEDICAL PRODUCTS DIVISION OF ANY DOCUMENTED CHANGES (RELATING TO FORM, FIT OR FUNCTION)
5. STAMP THE "SYMBOLS" MARKING ONTO THIS LOCATION
6. STAMP THE "PART NUMBER" MARKING ONTO THIS LOCATION

QTY 504	QTY 503	QTY 502	QTY 501	ITEM OR SYMBOL	PART NUMBER	DESCRIPTION
						LIST OF MATERIAL

MATERIAL:

FINISH:

REF. DWGS

UNLESS OTHERWISE SPECIFIED:
METRIC DIMENSIONS (WHEN USED) ARE IN ( ).
DIMENSIONS INCLUDE PLATING.
REMOVE BURRS & SHARP EDGES.
THREADS ARE UNIFIED SERIES AND INCLUDE PLATING.
EXTERNAL THDS = CLASS-2 A
INTERNAL THDS = CLASS-2 B

GROUP OR PART	NEXT ASS'Y	QTY	USED ON
	APPLICATION		

UNLESS OTHERWISE SPECIFIED DIMENSIONS ARE IN INCHES

TOLERANCES ON:

BASIC DIMENSION	.XX	.XXX
UP TO 6	± .02	± .005
ABOVE 6 TO 24	± .03	± .010
ABOVE 24	± .06	± .015

ANGLES: ± 1/2 DEGREE

DO NOT SCALE

		DATE
DRAWN	P BARAN	3/4/96
CHECKED	R GABAK	3/5/96
APPROVED	WK MOULTON	3/5/96
	EH WOONTON	3/6/96
REL.FOR PROD.	D RUTAN	3/7/96

WELCH ALLYN, INC.
SKANEATELES FALLS, N.Y. U.S.A.

TITLE: 24 WATT LAMP REFLECTOR/CERAMIC RING

CODE IDENT. 64475 | C | DRAWING NO. 09500-U | REV. C

SCALE | SHEET 1 OF 4